North South University

Department of Electrical & Computer Engineering

LAB REPORT

Design Schematic Diagram and Layout of CMOS Circuit using Cadence Software

Course: EEE411-Lab (Introduction to VLSI)
Course Instructor: Iqbalur Rahman Rokon (IQR)
Lab Instructor: Abu Tammam Bin Nuruddin

Submitted By:
Name: Sariah Tul Qarim
ID: 1911279043
Section: 01

Experiment Name:

Design Schematic Diagram and Layout of CMOS Circuit using Cadence software.

Objective:

The main objective of this experiment is to build the schematic diagram and design the layout for different CMOS circuit. In this lab, we have designed schematic and layout for NAND2, NOR2 and NOT circuit. At first, we have designed the schematic diagram and checked if the output matched with the theoretical output or not. For that, we had to run the transient analysis and dc analysis for all three circuits.

After designing the schematic diagram, we had to design the layout for the circuit and compare with the schematic diagram by using LVS simulation. We have to go through Design Rule Checker (DRC) as well to make sure the proper and accurate evaluation.

Theoretical Analysis:

There are two types of fets- P-fet and N-fet. P-fet passes strong 1 and weak 0, and N-fet passes strong 0 and weak 1. We need to go through some important steps to create a CMOS circuit. At first, we have to simplify the equation if needed. Secondly, count the number of inputs from the simplified equation. Let some input variables be **n** in the equation, then we will need **2n** number of fets where half of them will be P-fet and another half of them will be N-fet.

In the AND operation P-fet will be connected in parallel, and N-fet will be connected in series. In the OR operation, P-fet will be connected in series and N-fet will be connected in parallel. In the NOT operation, we will have one P-fet and one N-fet. In CMOS, three parts of fets are drawn

theoretically- gate, body, and drain. The source of P-fets will be connected with Vss and the drain will go with the output. Similarly, the drain of the N-fet will be connected with the output, but the source will be connected with Vdd. The gates of fets will be connected to the inputs.

NAND2:

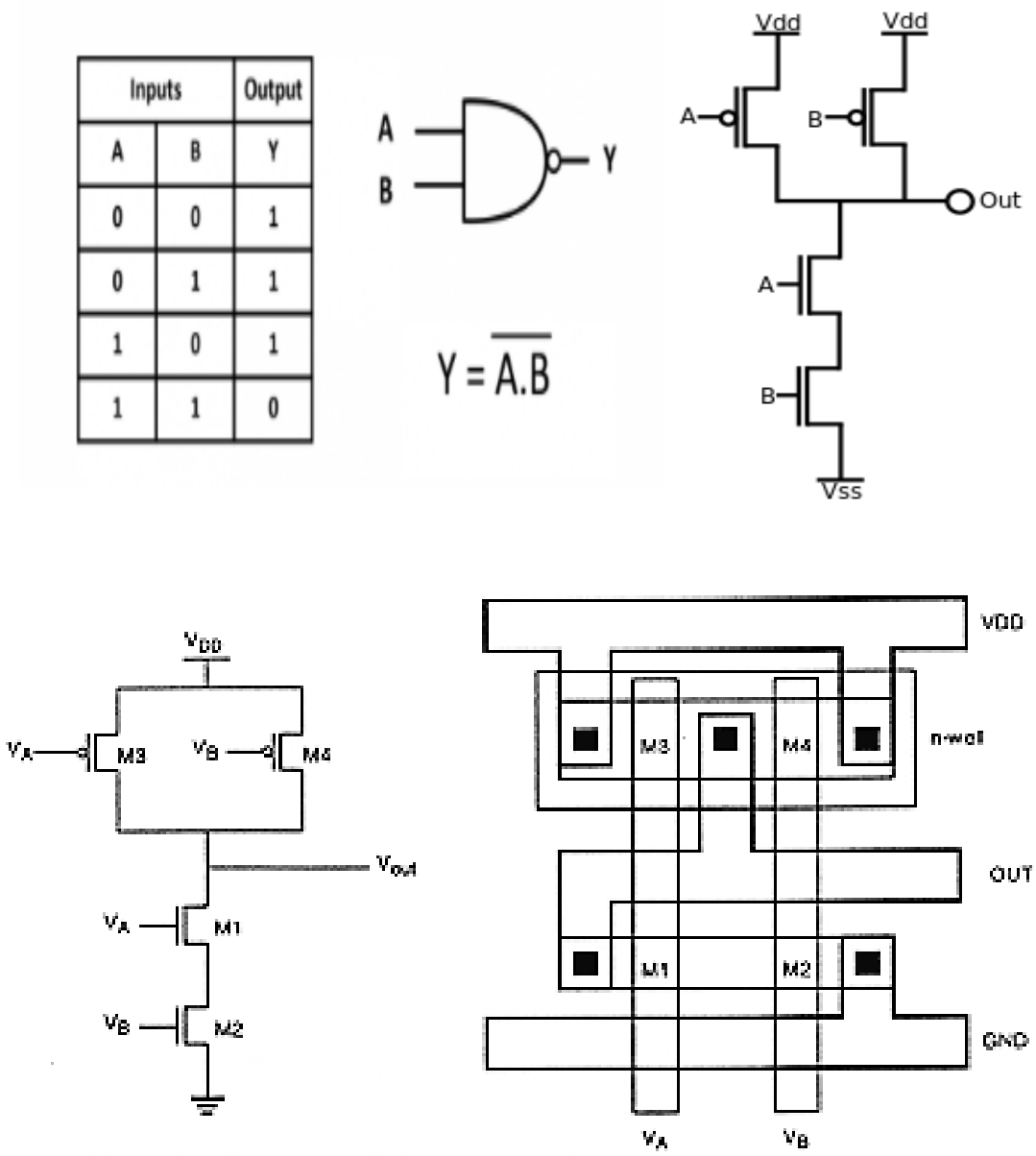

Figure 1: NAND2 gate, truth table, circuit diagram and layout

NOR2:

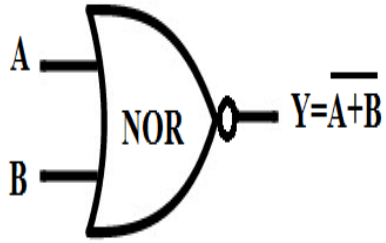

Inputs		Output
A	B	$Y=\overline{A+B}$
0	0	1
0	1	0
1	0	0
1	1	0

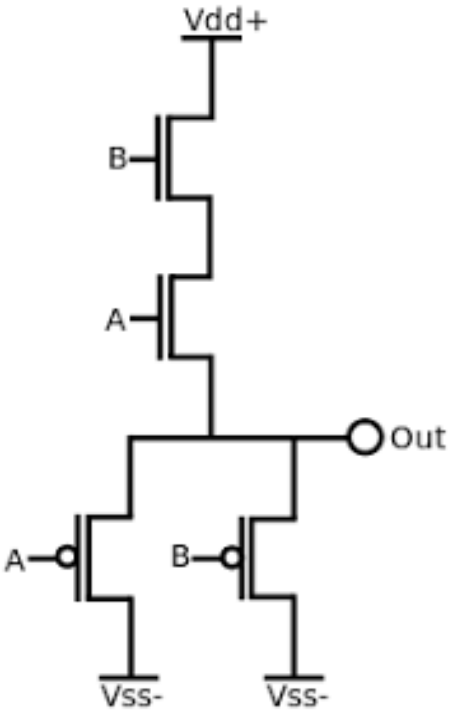

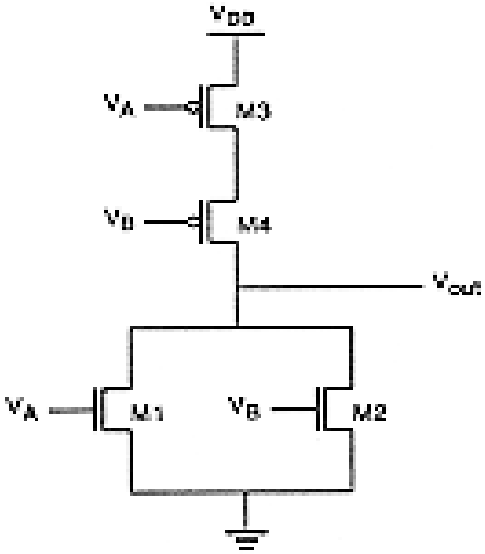

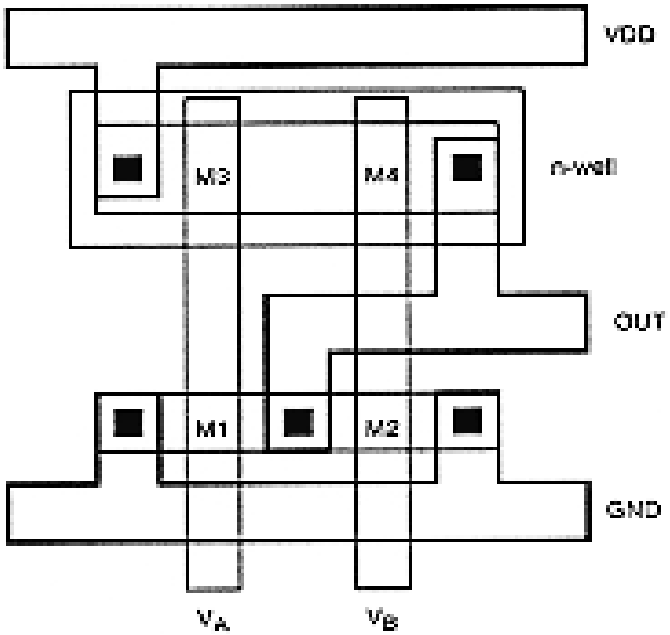

Figure 2: NOR2 gate, truth table, circuit diagram and layout

NOT:

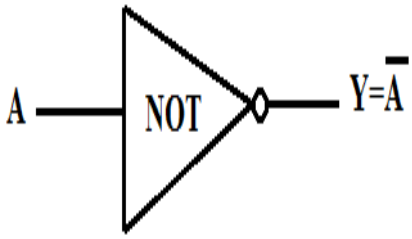

Input	Output
A	Y=$\bar{A}$
0	1
1	0

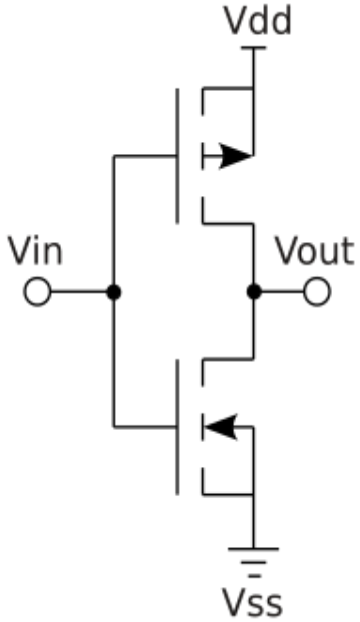

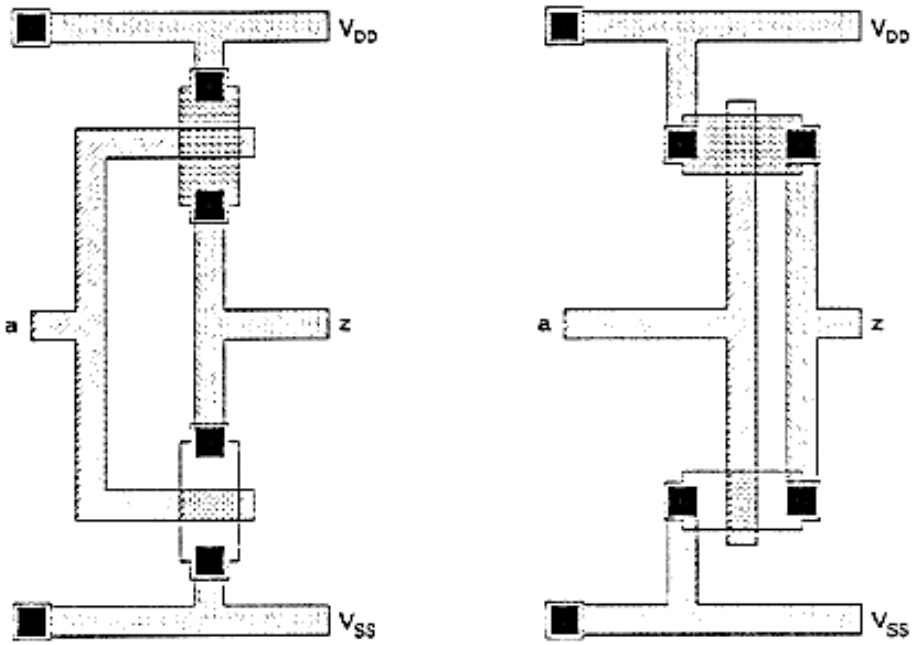

Figure 3: NOT gate, truth table, circuit diagram and layout

➢ Schematic and Layout from Cadence

NAND2

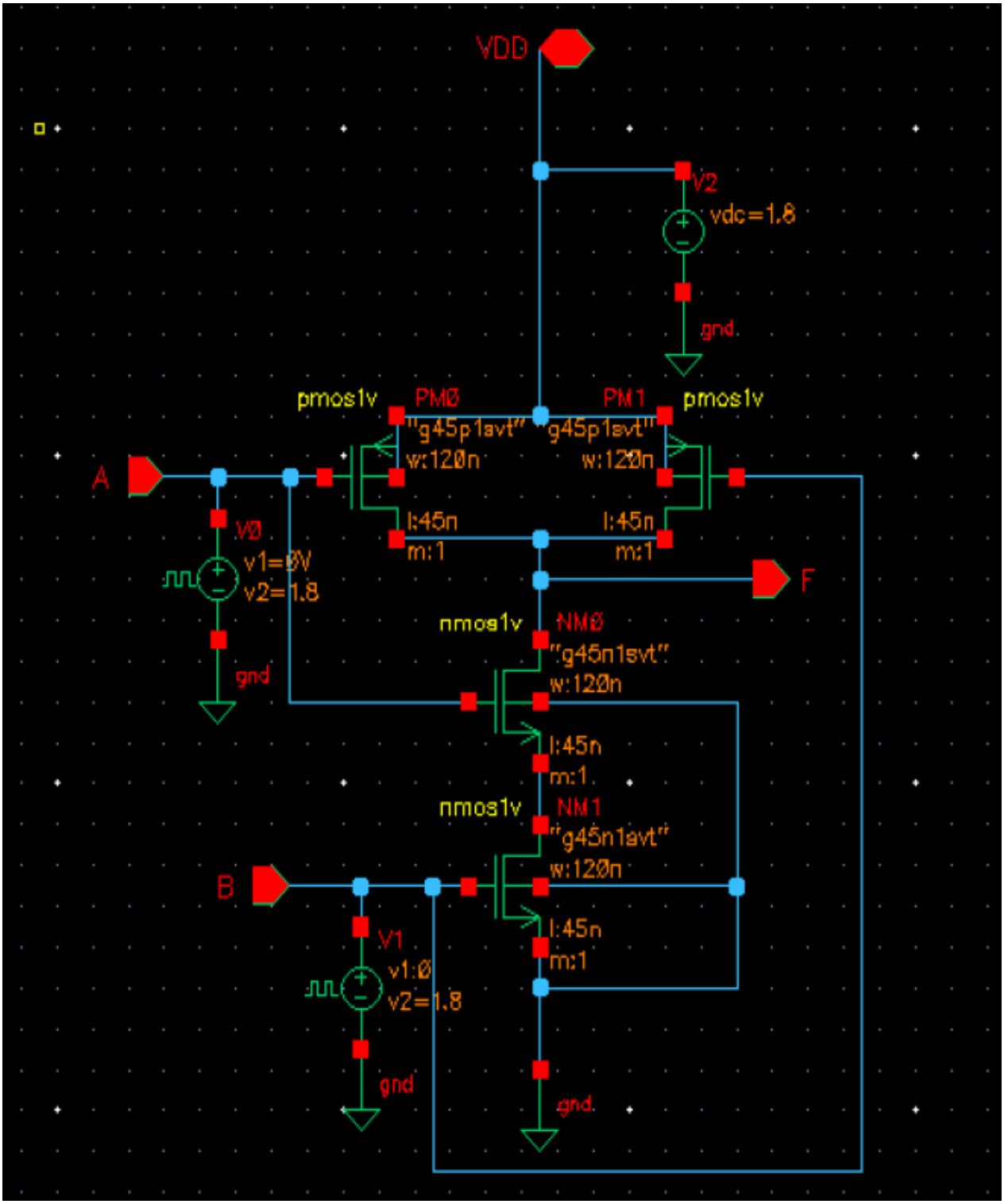

Figure 4: NAND2 Schematic Diagram

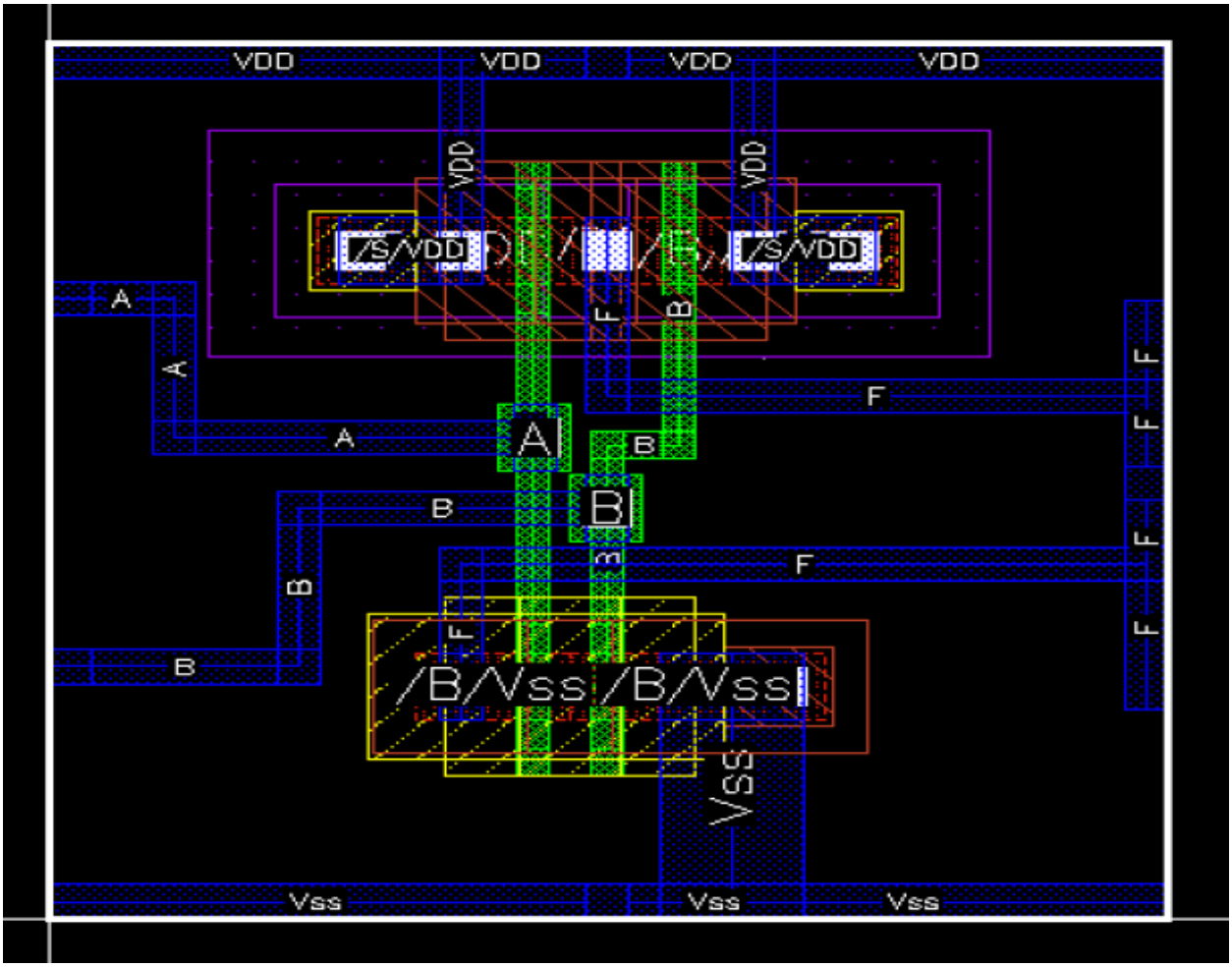

Figure 5: NAND2 Layout

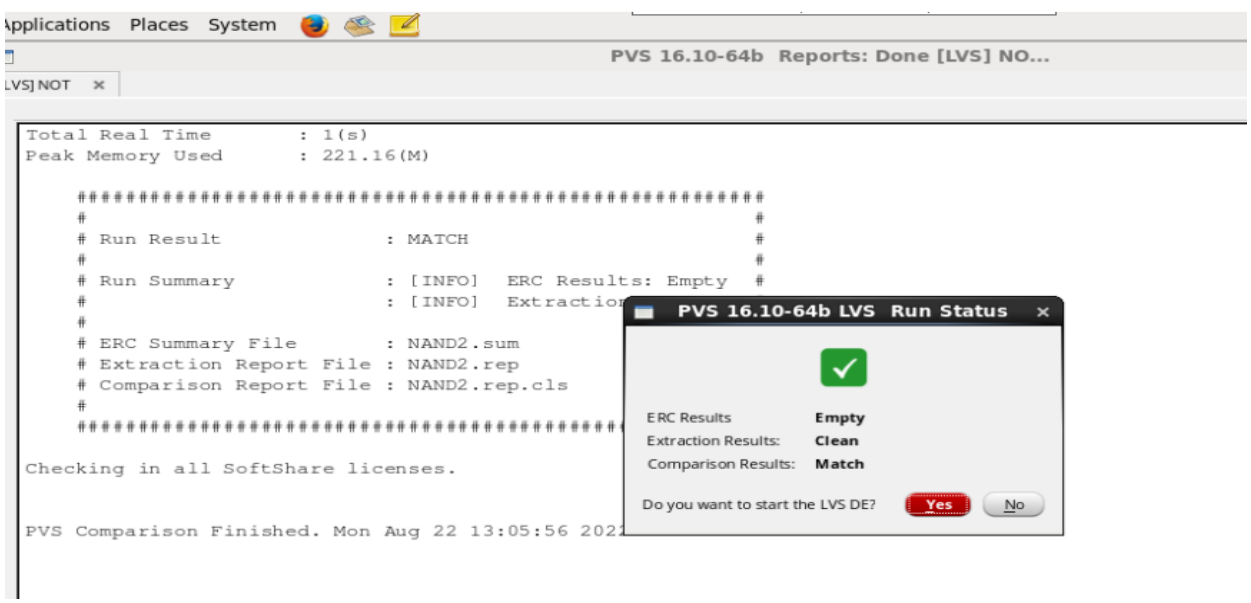

Figure 6: LVS run matched for NAND2

NOR2

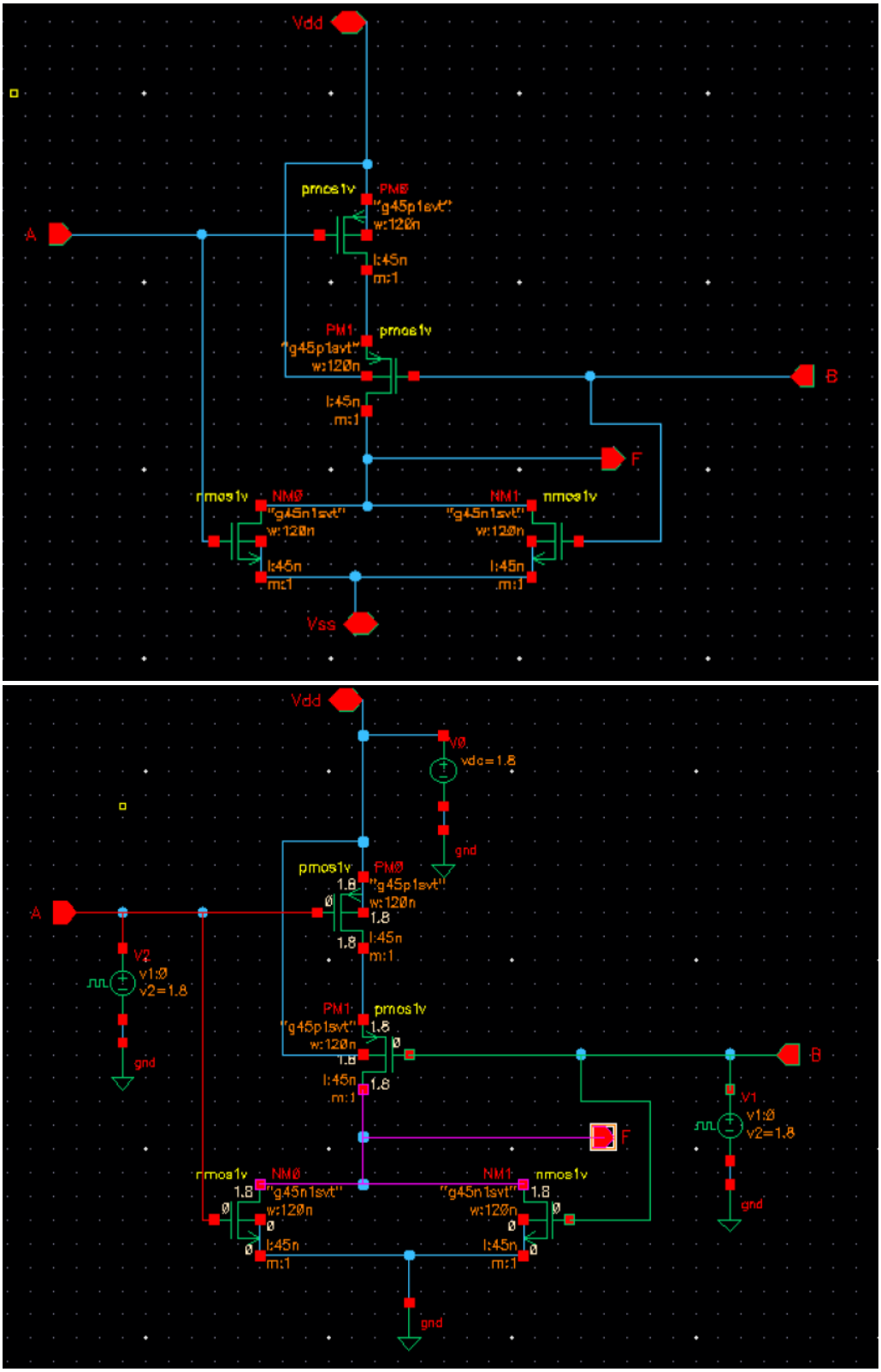

Figure 7: NOR2 Schematic Diagram

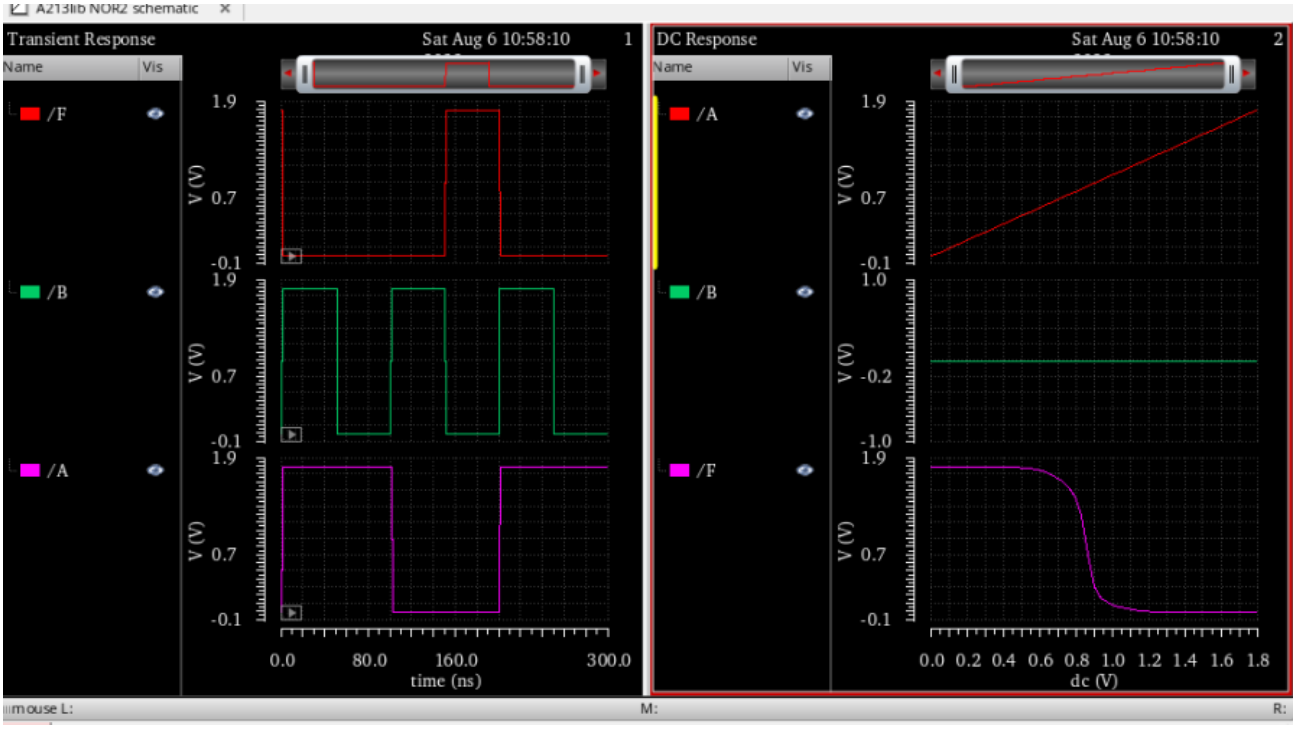

Figure 8: NOR2 Transient & DC Analysis

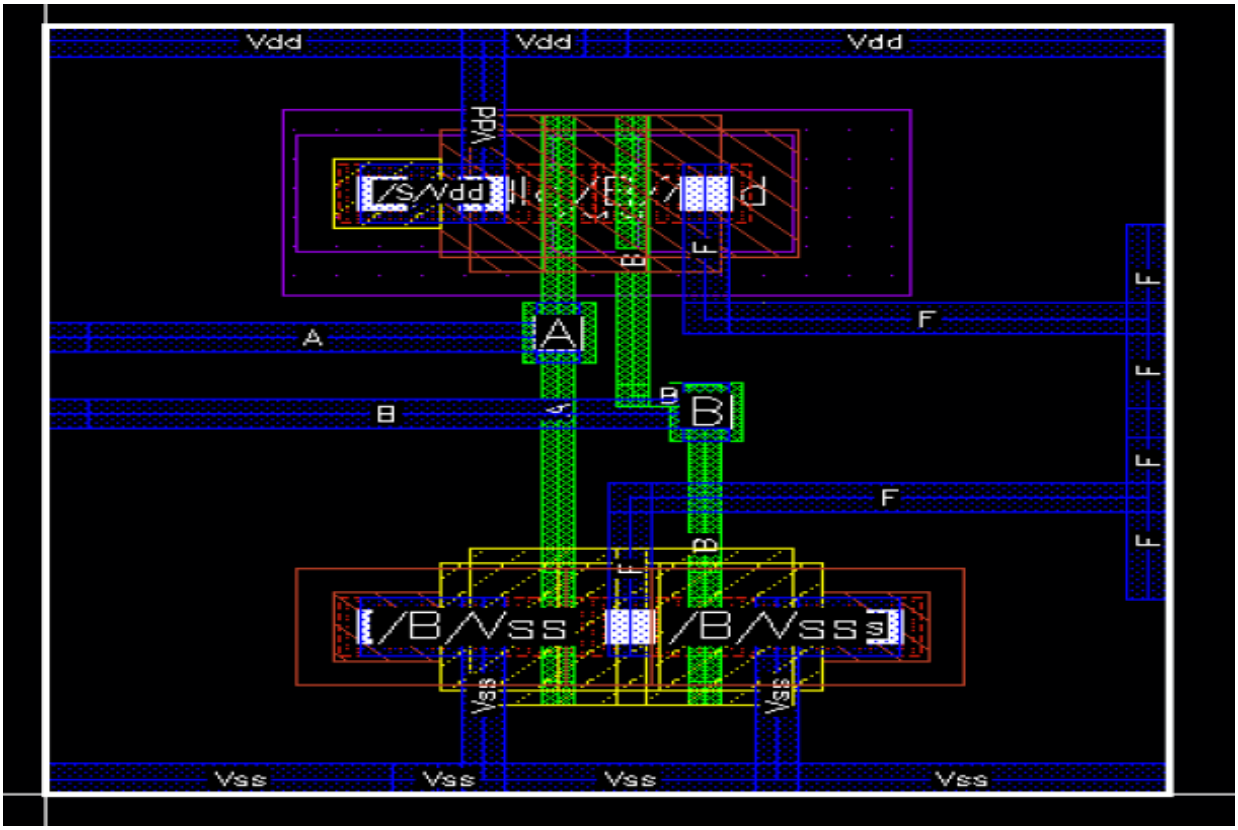

Figure 9: NOR2 Layout

NOT

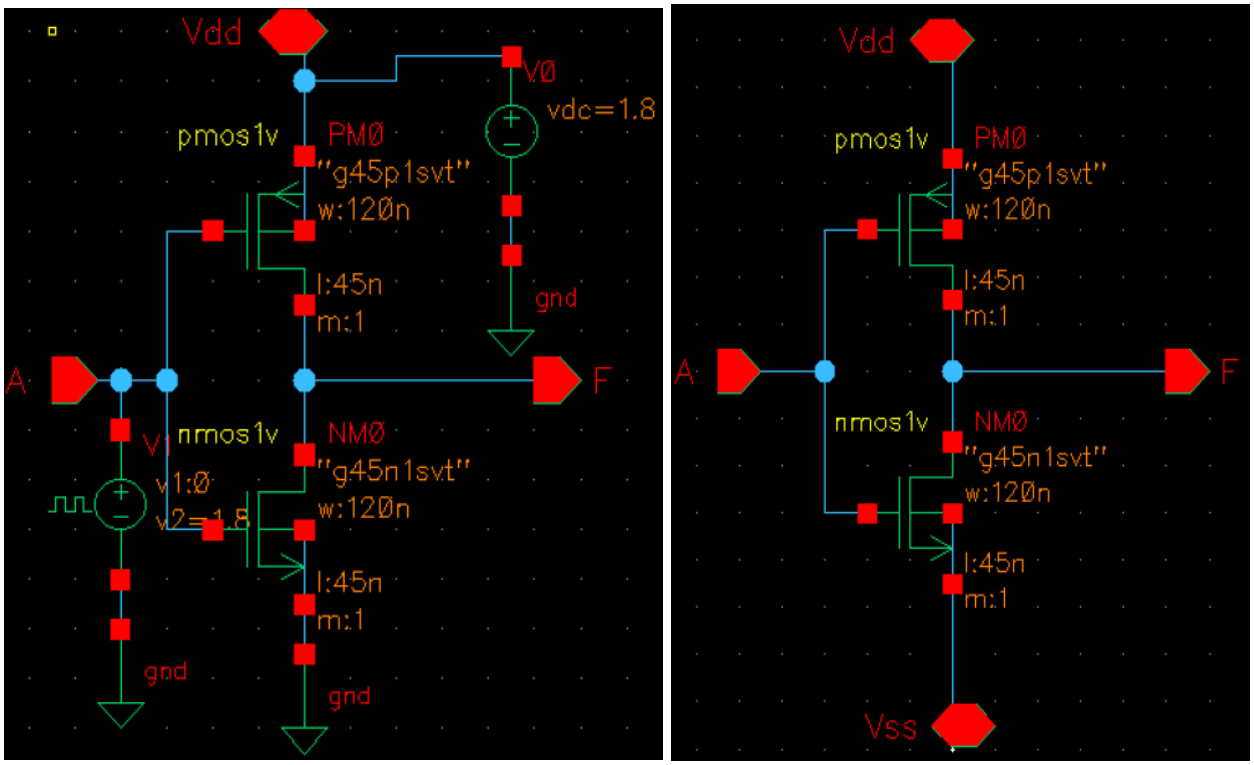

Figure 10: NOT Schematic Diagram

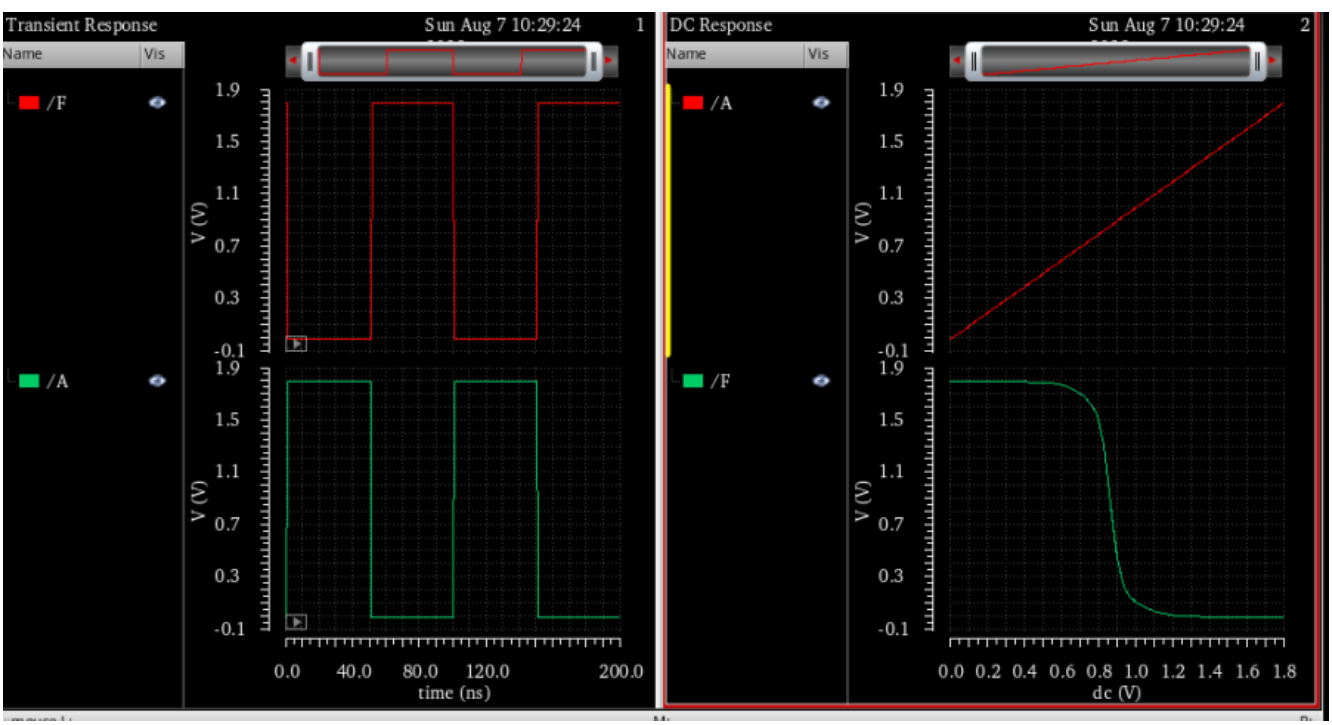

Figure 11: NOT Transient & DC Analysis

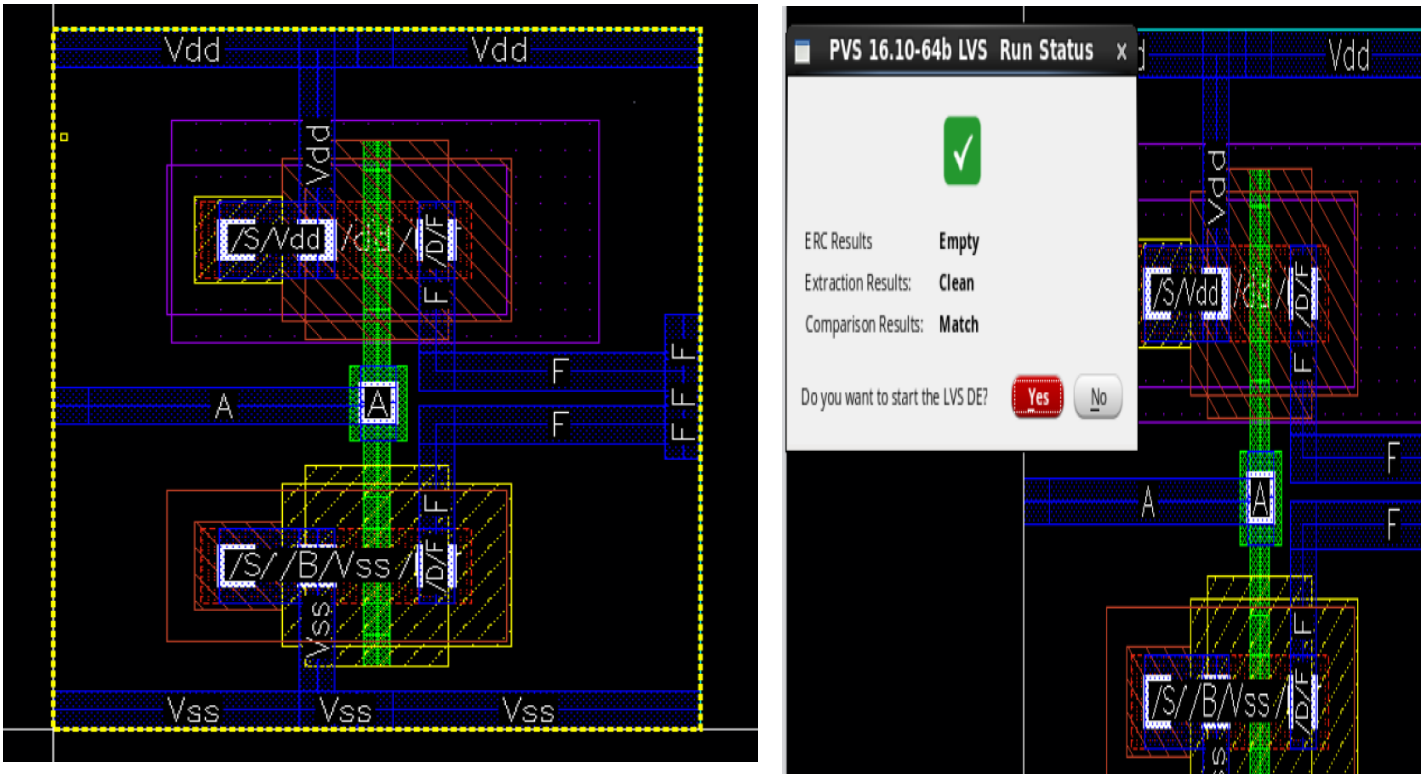

Figure 12: Layout and LVS run matched

Procedure

1. **Make Directory:** Firstly, we need to login to our VNC viewer account using the IP address and password. After login, we need to create a new directory for our project. To make directory we need to open terminal and write some command. **cd** is used to change directory**, mkdir** is used to create directory.

2. **Open Virtuoso:** After creating the new directory we need to open virtuoso window. For this we need to type **csh.** csh stands for c shell. After calling the c shell environment, we have to source the path file by using **source cshrc**. After that, we need to type **virtuoso** to launch the **virtuoso window**.

3. **Create Library:** After opening the virtuoso we need to create library by clicking **new library**. We need to create library only once. After crating library, we need to add Technology file with it. We need to attach **gdpk045** library

4. **Create Cell:** After creating library we need to create cell. For this we need to go to the **library manager** window and then go to the new option from there **new cell**. Then we will create different cell for **NAND2, NOR2,** and **NOT** circuit.

5. **Schematic Diagram:** After creating cell a new black window will pop up. Then we have to bring n-fet and p-fet from the add instance option and we need to add **gdpk045** library for that. Then we have to search **nmos1v** and **pmos1v** as required. After bringing nmos and pmos we need pins. We can use **Add pin** for that**.** We need two input pins a, b and set direction as **input**. For Vdd and Vss we need to select the direction as **input-output**. For output pin we need to select **output** in direction. For doing analysis we need to select Add instance again but this time we have to select **analoglib** and bring **vdc, gnd** and **vpulse.** Now we need to connect the **vpulses** with **inputs**. One vpulse with input **a** and another one with input **b**. Then connect the **vdc** with **vdd** and **gnd** with the **negative terminal** of all the devices.

6. **Set properties of analog devices:** After that we need to set values or properties for analog devices. To go to property window, we need to select the desired device and press **q** on your keyboard. Then set **DC voltage** for **vdc** to **1.8V**. For the **first vpulse(a),** set the **Voltage 2** to **1.8V**, **Period** to **200n**, **Pulse Width** to **100n**. For the **second vpulse(b),** set the **Voltage 2** to **1.8V**, **Period** to **100n**,

Pulse Width to **50n** and then press **OK**. Here we have to keep the period and the pulse width of input b is half of the input a.

7. **Transient and DC analyses:** If after clicking **check and save** there are no error, we can do analyses now. For doing that we have to click **Launch** and select **ADE L**. A new window will pop up. Then we have to click on Analyses and then select **choose** option. Then we have to select **tran** for transient analysis and set the **Stop Time** to **300n** (Higher than the period of input a). Then we have to select **Analysis** again then select **Choose** and select **dc**, we have to check both c both Save **DC Operating Point** & **Hysteresis Sweep** then select on **Component Parameter** and set the **Start Stop** range **0V** to **1.8V**. Then from **to be plotted** window we need to select two input and output pin and click on the green play button for running the dc and transient analysis. The left graph is the transient analysis and the right graph is the dc analysis graph.

8. **Layout Design**: To create a layout of the CMOS circuit schematic diagram, first we have to **remove all the electrical components** connected to the schematic diagram. After removing them, from **layout XL** of Launch option, we find a window of layouts. Then from connectivity window we can export the layout instances from the schematic. The MOS with purple outline are p-MOS and yellow outline they are N-MOS. Then we have to connect the drain and source of these circuit as required. We can align those boxes by pressing button A. We need to connect the poly of both nmos and pmos by pressing p on the keyboard. Then we need to connect all the metal lines. After that we need two via by pressing O in keyboard. We will use the contacts or vias to make connections between two different layers. Then we need to integrate the body of MOSFETs

by pressing Q. At last, we have to connect the body of the p-MOS device with VDD and the body of the Nmos with VSS.

9. **Run LVS:** LVS means **Layout vs Schematic**. After creating layout, we have to run LVS. For that we have to click PVS then LVS. Then we have to select the directory for example NAND2. Then we have to select **pvtech.lib.** From input we have to select **Geometry Text.** In the LVS option we have to select **see Flat Extraction** then we have to **click apply** and press **submit button**. A green tick will appear and it means LVS is clean we can click yes to see the LVS report.

10. **Run DRC:** DRC means **Design Rule Checker**. The simulation process is similar to LVS. After launching DRC, we may have some errors in the layout which can be corrected by the process of debugging. We can debug or find the errors of our CMOS circuit using DRC.

<u>Note:</u> The procedure is same for all the circuits of NAND2, NOR2 and NOT gates.

Analysis:

- **NAND2:** In the transient analysis, we have observed for NAND2 that when input A and B are 1 then output is 0, and, for other inputs combination, the output is 1. It matches the truth table for NAND2. Therefore, there is no error in the graph that we got from the transient analysis.

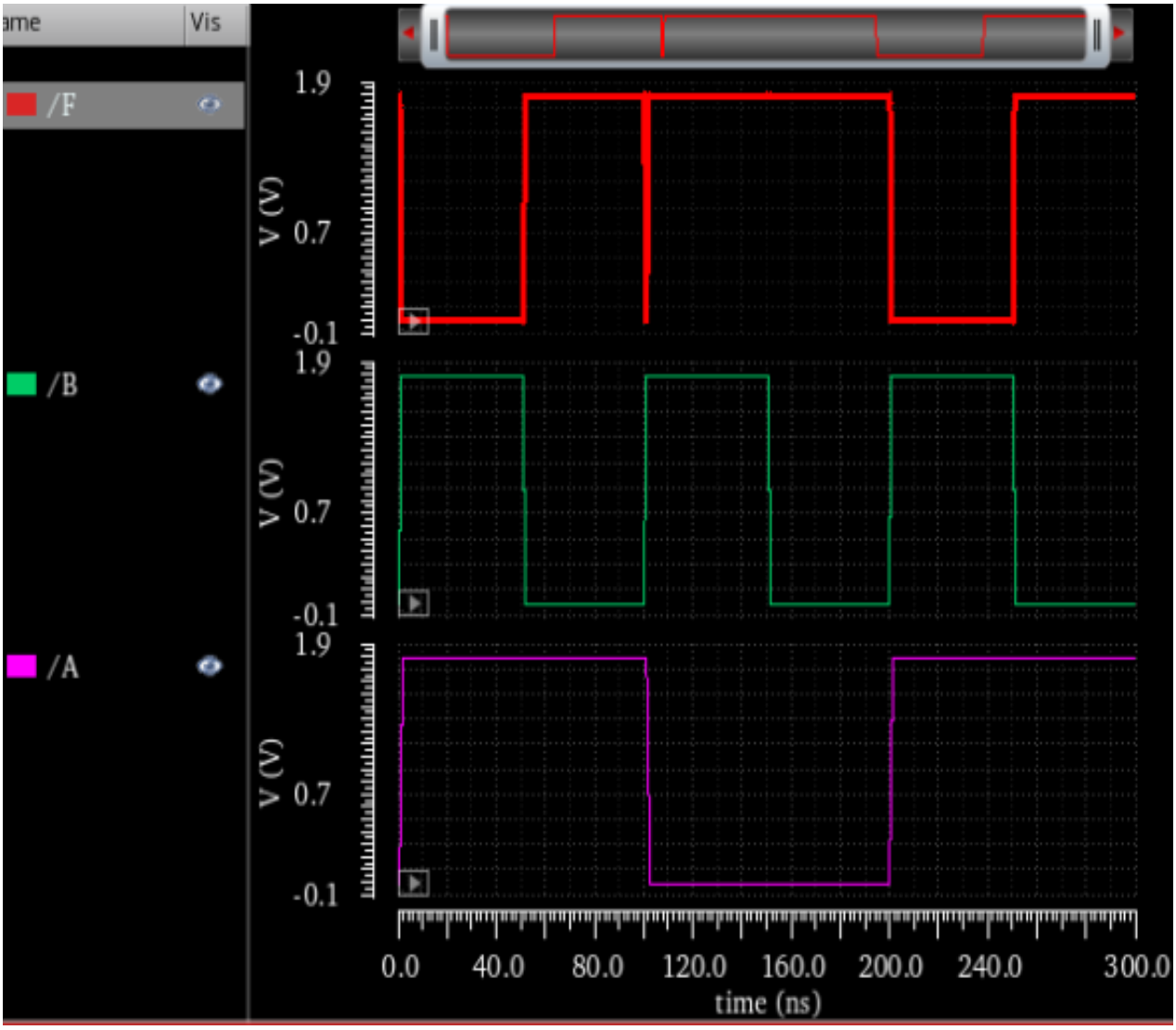

Figure 13: NAND2 Transient Analysis

- **NOR2:** In the transient analysis, we have observed for NOR2 that when input A and B are 0 then output is 1, and, for other inputs combination, the output is 0. It matches the truth table for NOR2. Therefore, there is no error in the graph that we got from the transient analysis.

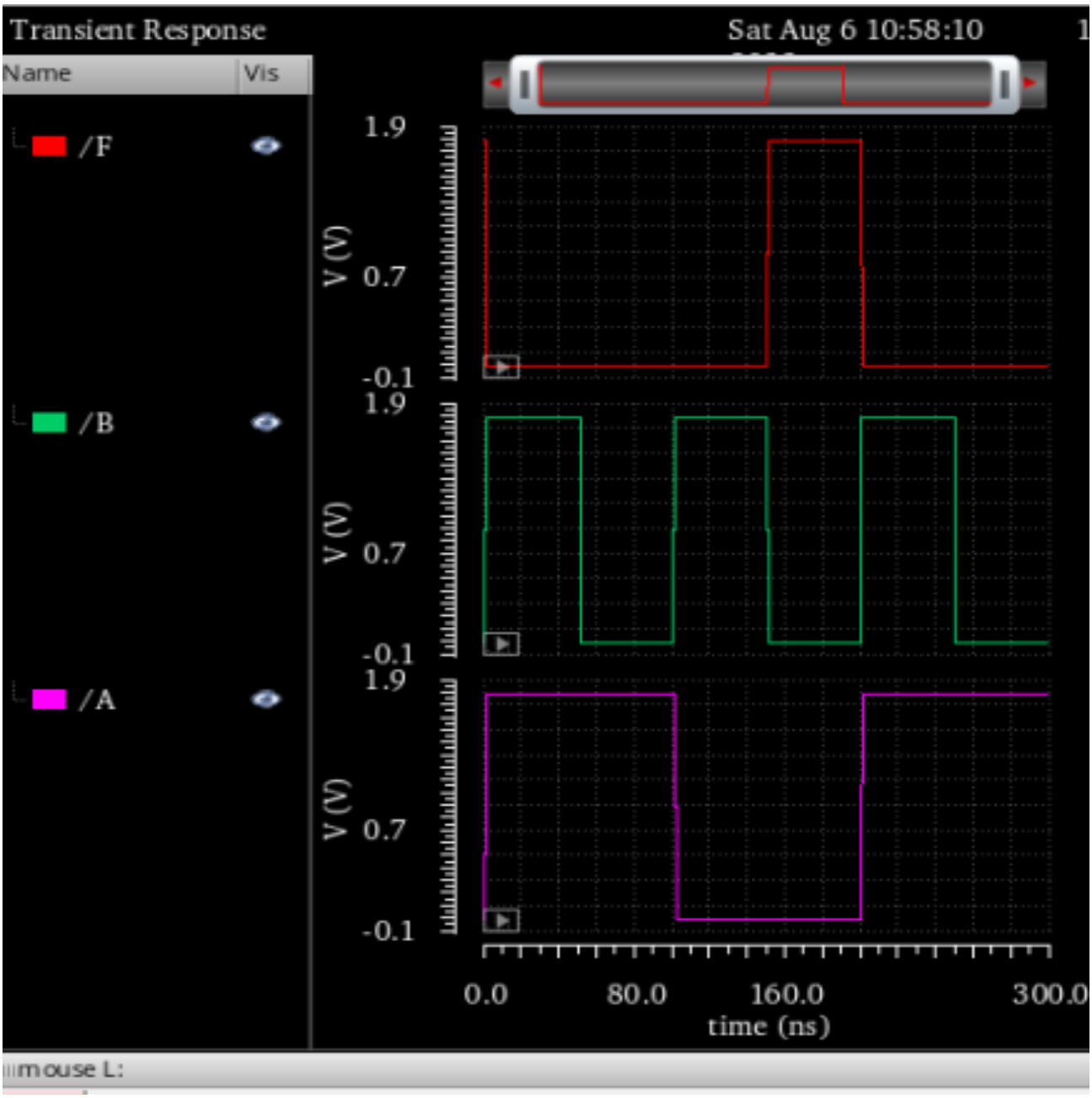

Figure 14: NOR2 Transient Analysis

- **NOT:** In the transient analysis, we have observed for NOT that when the only input is 0, then output is 1, and, for input 1, it gives 0 as the output. It always gives the inverted output. It matches the truth table for NOT. Therefore, there is no error in the graph that we got from the transient analysis.

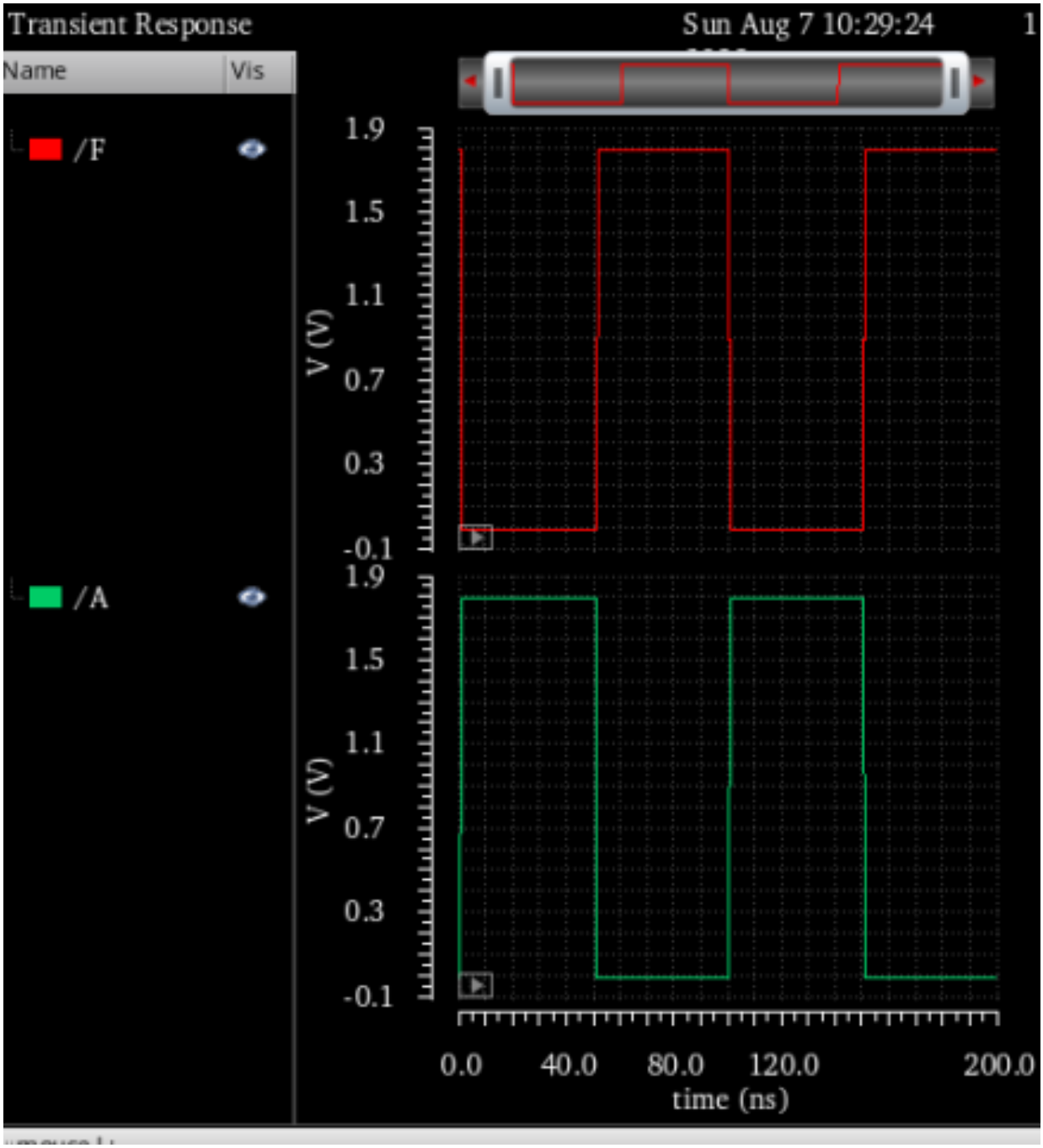

Figure 15: NOT Transient Analysis

Conclusion:

When we started the lab class, I was a bit nervous about the software Cadence as it was very different from other software I have used earlier. However, my lab instructor always helped us learning this new software. So gradually I have learned using it. After 2 classes, it was totally clear to me how to use cadence. With the help of my lab instructor, I have done all the schematic diagrams and layouts successfully in time, therefore I have never faced failure while doing the designs and simulation. The very first few classes were boring to me as the theory was so lengthy. But after I started using Cadence, lab classes became very exciting to me. I have done all the designs and simulation with fun as I have never faced any problem so far. Even it made me so fascinated that I have done the NOR2 and NOT circuits before the classes started designing those circuits.